UPPER SADDLE ASSEMBLY

V1.0
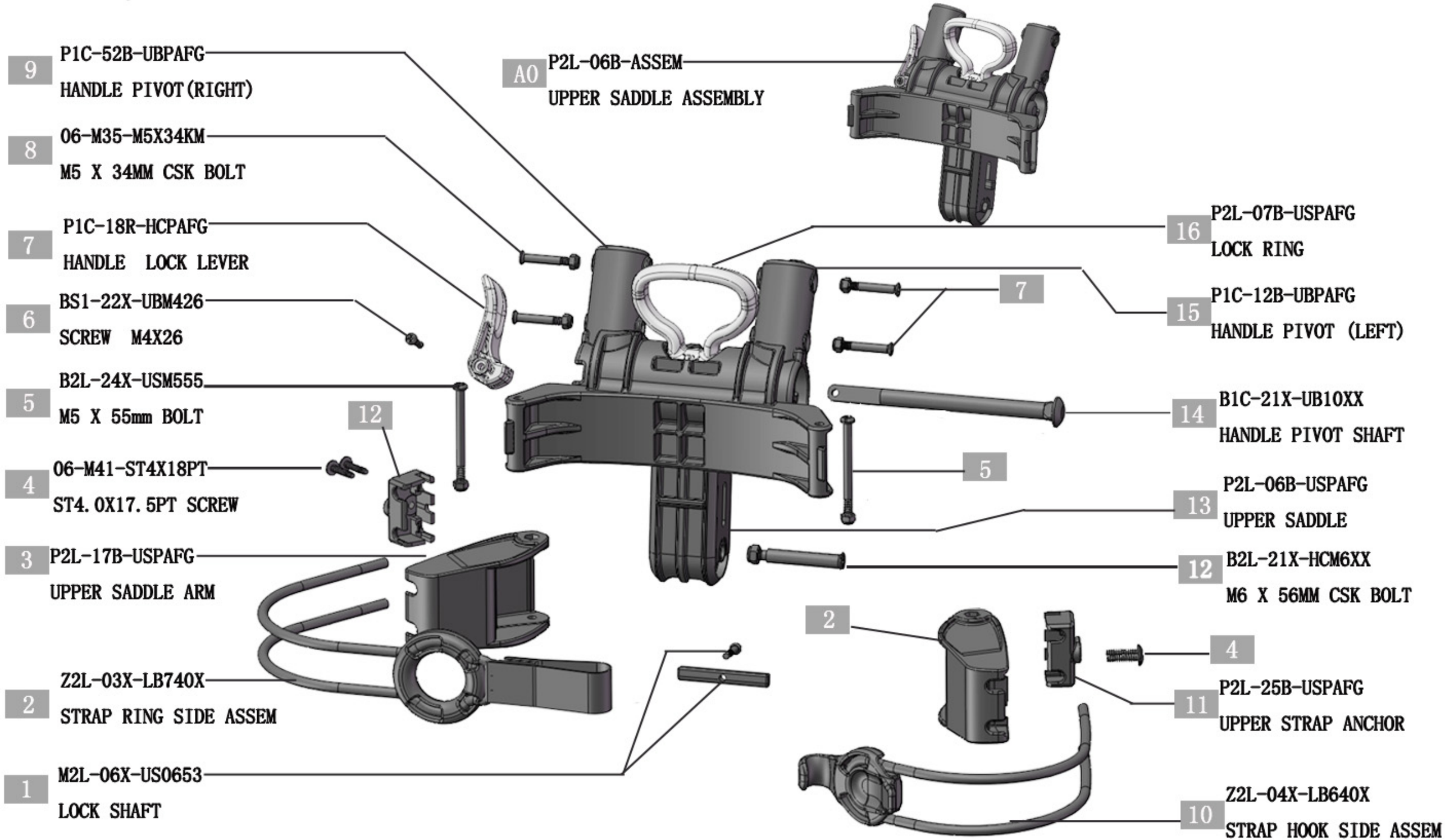
P4